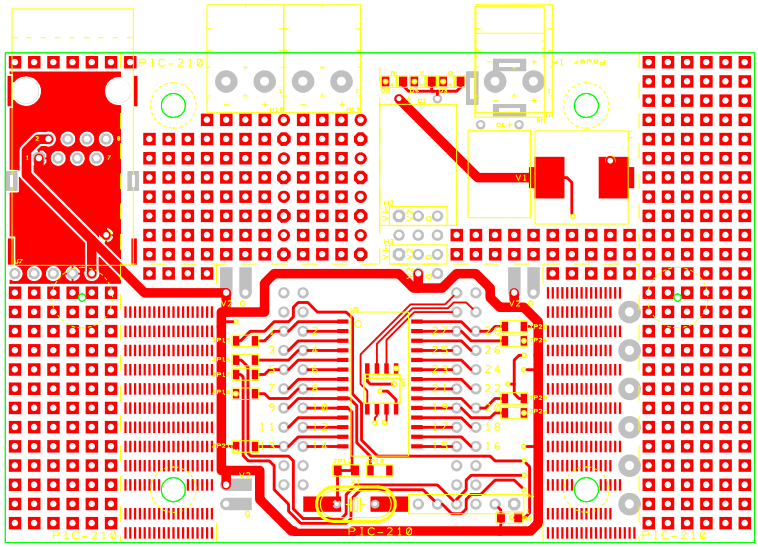
PIC-210
Power 1A
PIC-210
PIC-210
PIC-210

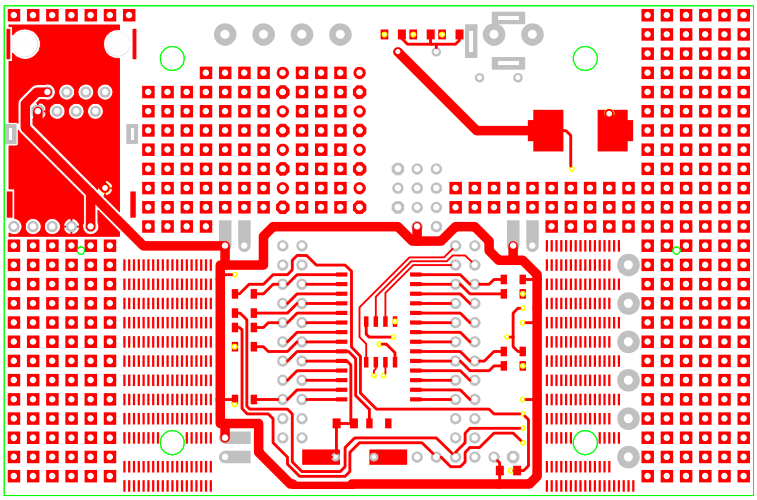

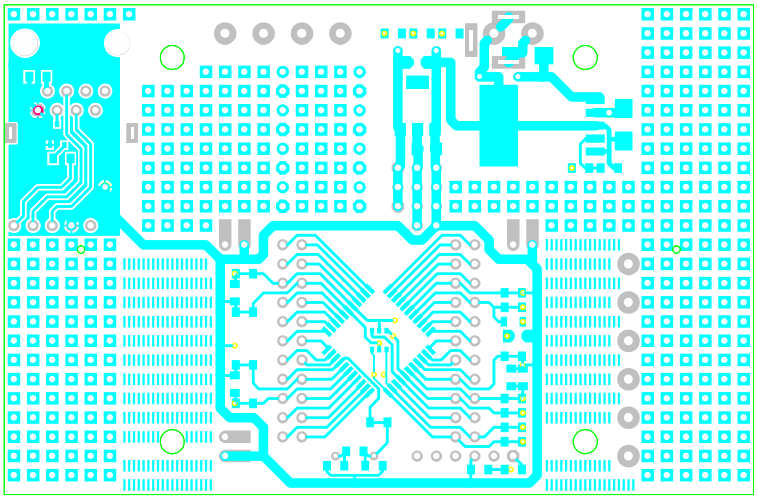

PIC-210
PIC-210
PIC-210
Power 1
+
-
+
-
+
-

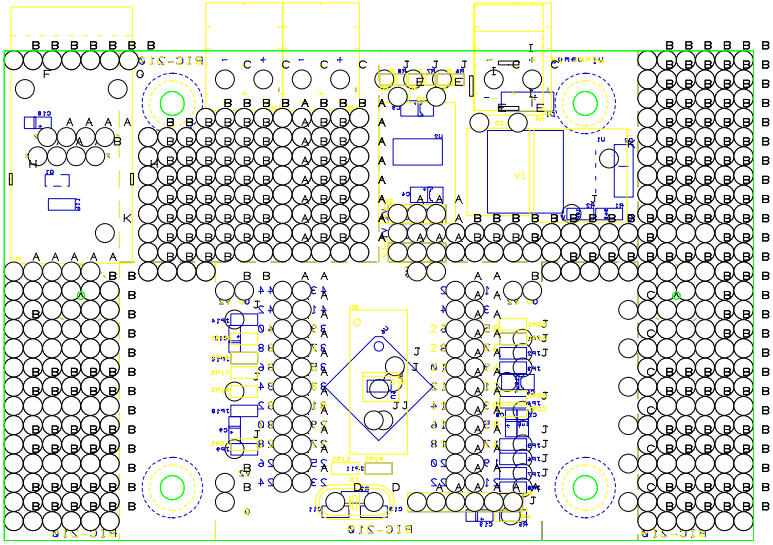

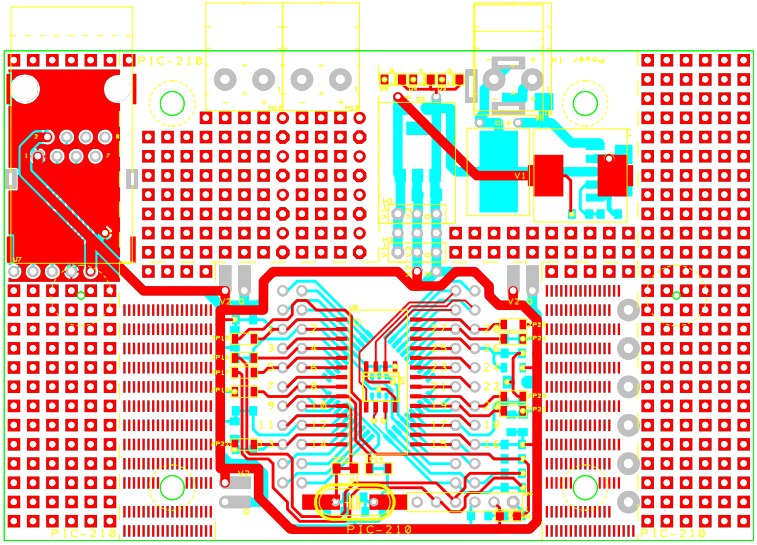
PIC-210
Power
V1
V2
PIC-210
PIC-210
PIC-210